IP Open Standards Cameras

Standard Resolution, 1.3MPx, 2MPx, 3MPx and 5MPx IP Box Cameras

OVERVIEW

The TruVision™ line of IP and IP Megapixel Open Standards box cameras bring state-of-the-art, high-definition pictures to the mass video surveillance market. With a wide variety of camera resolutions ranging from standard resolution through 5 megapixel, these IP cameras represent a flexible video surveillance device to meet any need. Equipped with advanced technology and signal processing capability, they effectively capture video under challenging conditions.

TruVision cameras utilize H.264 compression technology with dual-streaming capability, making it easy to manage the camera's bandwidth usage. These cameras were designed to adhere to PSIA and ONVIF open communication standards, and support a CGI command set for simple integration into any IP system. Video streams can be set for high and low bandwidth and images can be streamed for live viewing or sent to a designated recording location.

Featuring an integrated browser and available SDHC memory card storage capabilities, TruVision IP and IP Megapixel cameras simplify remote, live monitoring/playback of edge-recorded video and audio. Recording on the memory card provides a level of redundancy in case of unforeseen network disruptions.

These cameras also feature bi-directional audio and alarm inputs and outputs. Privacy masking conceals sensitive scenes and safeguards confidential areas from being observed during live view and recorded on the video file.

STANDARD FEATURES

- Range of resolutions including Standard, 1.3MPx, 2MPx, 3MPx and 5MPx imagers
- Designed to PSIA and ONVIF open standards
- Select models feature real-time video streaming up to 1080p resolution for exceptionally detailed image capture
- H.264 compression with dual-streaming functionality accommodates multiple settings
- Edge recording supports up to 32GB SDHC card for audio/video playback
- Day/Night functionality with I/R cut filters captures images in various lighting scenarios
- Integrated motion detection and privacy masking
- Alarm inputs and outputs provide easy notification and control of events
- Browser-supported mono and bi-directional audio to expand IP stream to include audio
- External analog BNC video out connection for easier installation and setup
- Included TruVision Device Finder program provides fast and easy access to newly added system devices

Application

Delivering detailed images in a variety of environments that need it most, TruVision™ IP and IP Megapixel cameras are specifically designed for applications that require high-quality IP images. When paired with IP devices, these cameras provide ideal surveillance for environments such as retail, banking, airports or gaming where detailed image capture is critical for effectively monitoring people and transactions.

Dimensional Diagrams

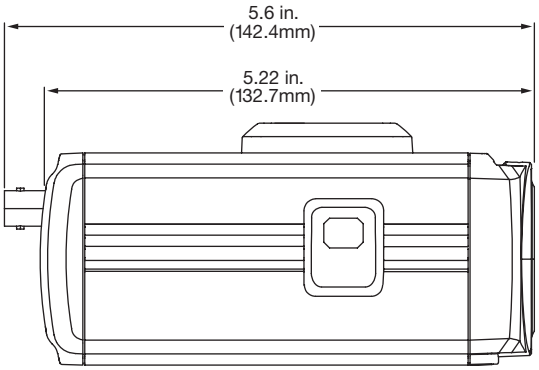

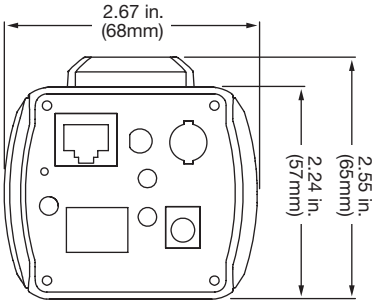

Accessories

TVC-OH/TVC-OH-H
Box Camera and Outdoor IP 66 Clamshell Housing

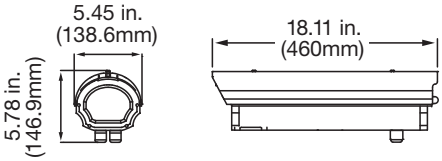

TVC-OH-HW
Box Camera Outdoor IP 66 Clamshell Housings with Heater and Wiper

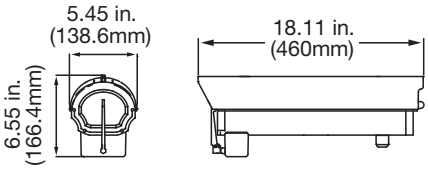

TVC-M-WM Box and Clamshell Housing Wall Mount

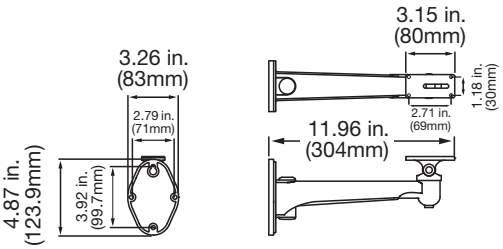

TVD-M-PMA Pole Mount Adaptor
(For use with TVD-M-OWM, TVD-M-WM, TVC-M-WM)

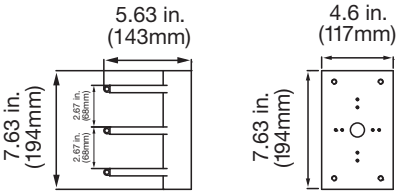

Specifications

	PART NO.	TVC-N220-1-N	TVC-N240-1-N	TVC-M1220-1-N	TVC-M2220-1-N	TVC-M3220-1-N	TVC-M5220-1-N
	Description						
Camera	Sensor	1/4" Progressive Scan CMOS	1/3" WDR CCD	1.3 MPx 1/3" Progressive Scan CCD	2.0 MPx 1/3" Progressive Scan CMOS	3MPx 1/2.5" Progressive Scan CMOS	5.0 MPx 1/2.5" Progressive Scan CMOS
	Day/Night	Motorized IR Cut Filter					
	IP Compression/Standard	H.264 PSIA/ONVIF					
	Maximum Resolution (@ fps)	640 x 480 (30 fps)	704 x 480 (30 fps)	1280 x 960 (15 fps)	1600 x 1200 (15 fps)	2048 x 1536 (15 fps)	2560 x 1920 (7.5 fps)
	Maximum Real-Time Resolution (@ fps)	640 x 480 (30 fps)	704 x 480 (30 fps)	1280 x 720 (30 fps)	1280 x 720 (30 fps)	1920 x 1080 (30 fps)	1920 x 1080 (30 fps)
	Dual Streaming	Yes					
	Video Bit Rate	32 Kbps to 8 Mbps, adjustable					
	Sensitivity	0.03 Lux (Color)	0.35 Lux (Color)	0.45 Lux (Color)	1.5 Lux (Color)	0.6 Lux (Color)	0.6 Lux (Color)
	S/N Ratio	> 50 dB					
	Auto Exposure (shutter)	1/25s to 1/100,000s					
	Composite Output (BNC)	NTSC, 1.0 Vp-p @ 75 ohm	NTSC, 1.0 Vp-p @ 75 ohm	NTSC, 1.0 Vp-p @ 75 ohm	NTSC, 1.0 Vp-p @ 75 ohm	NTSC, 1.0 Vp-p @ 75 ohm	NTSC, 1.0 Vp-p @ 75 ohm
	Lens	C/CS (w/auto iris)					
Electrical	Voltage Input	12 VDC PoE (IEEE 802.3af)					
	Power Consumption	4.5 Watts (10.5 Watts w/ IR cut filter motor)	5.5 Watts (10.5 Watts w/ IR cut filter motor)	7.5 Watts (12.5 Watts w/ IR cut filter motor)	4.5 Watts (9.5 Watts w/ IR cut filter motor)	5.5 Watts (10.5 Watts w/ IR cut filter motor)	5.0 Watts (10.0 Watts w/ IR cut filter motor)
	I/O Connection	Terminal Plug RJ45					
Network	Network Protocols	TCP/IP, HTTP, DHCP, DNS, DDNS, RTP/RTCP, PPPoE, SMTP, NTP					
	Ethernet/IP	CoS 802.1 p/Q, QoS, IPv4					
	PoE IEEE	802.3af					
Local Storage	Media	SDHC (Secure locked card slot)					
	Capacity	Up to 32 GB					
Audio	Input	1 ch. 3.5 mm audio interface (2.0 - 2.4 Vp-p, 1 kOhm)					
	Output	1 ch. 3.5 mm audio interface (Line level, 600 Ohm)					
	Audio Bitrate	16Kbps					
Camera Analytics	Motion Detection	On-board 396 zones per camera					
	Privacy Masking	On-board 396 zones per camera					
Alarm	Alarm Input	One (1)					
	Alarm Output	1 Form C alarm relay (1)					
	I/O Connection	Screw Terminal					
Mechanical/ Environmental	Dimensions	2.68 x 2.24 x 5.70 in. (68 x 57 x 144mm)					
	Weight	0.5kg (1.1bs)					
	Storage Temperature	-20 to 70°C (-4 to 158°F)					
	Operating Temperature	-10°C to 60°C (14 to 140°F)					
	Environmental Rating	Indoor					
PC Requirements	Intel-based PC	1 Ghz or faster					
	Memory	1 GB RAM					
	Operating System	Windows® XP, Vista or 7					
	CGI	Direct X 9.0 or later					
	Browser	Microsoft Internet Explorer 6.0 or later					

IP Open Standards Cameras

North America	Asia	Australia	Europe	Latin America
T 855-286-8889	T 852-2907-8108	T 61-3-9239-1200	T 32-2-725-11-20	T 561-998-6114

Standard Resolution, 1.3MPx, 2MPx, 3MPx and 5MPx IP Box Cameras

Ordering Information

Cameras	
TVC-N220-1-N	TruVision™ VGA IP Open STD, 1/4" CCD Traditional box camera, True D/N, ONVIF/PSIA, NTSC, PoE/12VDC, SDHC card slot
TVC-N240-1-N	TruVision 4CIF WDR IP Open STD, 1/3" CCD Traditional box camera, True D/N, ONVIF/PSIA, NTSC, PoE/12VDC, SDHC card slot
TVC-M1220-1-N	TruVision 1.3MPX Open STD, 1/3" Progressive scan CCD Traditional box camera, True D/N, ONVIF/PSIA, NTSC, PoE/12VDC, SDHC card slot
TVC-M2220-1-N	TruVision 2.0MPX Open STD, 1/3" Progressive scan CMOS Traditional box camera, True D/N, ONVIF/PSIA, NTSC, PoE/12VDC, SDHC card slot
TVC-M3220-1-N	TruVision 3.0MPX Open STD, 1/2.5" Progressive scan CMOS Traditional box camera, True D/N, ONVIF/PSIA, NTSC, PoE/12VDC, SDHC card slot
TVC-M5220-1-N	TruVision 5.0MPX Open STD, 1/2.5" Progressive scan CMOS Traditional box camera, True D/N, ONVIF/PSIA, NTSC, PoE/12VDC, SDHC card slot

Specifications subject to change without notice.

© 2011 Interlogix, A UTC Fire & Security Company
All rights reserved.

110-3467 2011/11 (67834B)

interlogix
A UTC Fire & Security Company

interlogix.com
utcfireandsecurity.com